STANDARD SIZE ROCKER SWITCHES

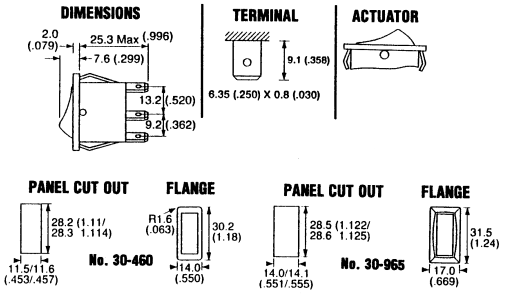

SPECIFICATIONS:

ELECTRICAL RATINGS:

16A	125-250V AC 85C	UL E45221
1/2HP	125V AC 1HP 250V AC 2 Position	UL/CSA
16A	125-250V AC	CSA LR10990
16 (4)A	250V AC T85	VDE 62411
20A	28V DC	Approvals N/A

MATERIALS:

Body: Nylon 6.6
Actuator: Nylon 6.6
Contact Gap (On Off SP Circuits): 3mm (.118)
Contact Material: Silver Alloy

Part No.	Type	Action			Actuator
30-460	SPDT	ON	-	ON	Black Nylon
30-965	SPDT	(ON)	OFF	(ON)	Black Nylon

NOTE: ( ) = Momentary

DOUBLE POLE HEAVY DUTY ROCKER SWITCHES
(Moisture and Dust Resistant)

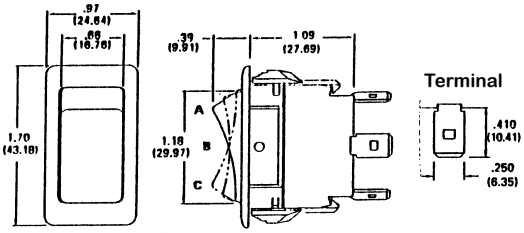

Recommended Mounting Hole:
±.015 ±.381 ±.005 ±.127
Fits .830 (21.08) x 1.450 (36.83) panel cutout in .093 (2.36), .125 (3.18), .187 (4.75) thick panels.

SPECIFICATIONS:

Current Rating:	20A @ 125V AC, 10A @ 277V AC 1-1/2 HP @ 125-250V AC
Initial Contact Resistance:	5 Meg ohm (Max.)
Insulation Resistance:	100 Meg ohm (Min.)
Dielectric Strength:	1000V AC for 1 minute
Gasket:	Molded Elastomer
Case:	UL94 Flame Class, 94V-2
Contact Material:	Brass
Terminal Material:	Brass
Terminal Type:	.250" Quick Connect

Part No.	Type	Action			Actuator
30-630	DPST	ON	-	OFF	Black Nylon
30-660	DPST	(ON)	-	OFF	Black Nylon
30-640	DPDT	ON	-	ON	Black Nylon
30-680	DPDT	ON	-	(ON)	Black Nylon
30-650	DPDT	ON	OFF	ON	Black Nylon
30-690	DPDT	ON	OFF	(ON)	Black Nylon
30-695	DPDT	(ON)	OFF	(ON)	Black Nylon

NOTE: ( ) = Momentary

ROCKER SWITCH

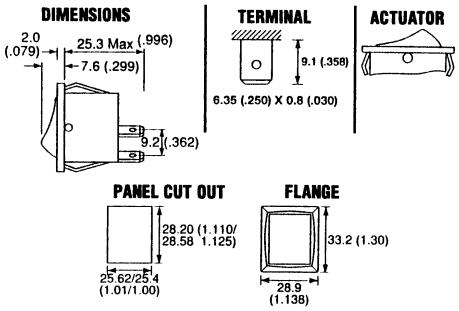

Mounting Hole: 1.0" x 1.12"

SPECIFICATIONS:

ELECTRICAL RATINGS:

20A	125-250V AC 85C	UL E45221
1/2HP	125V AC 1HP 250V AC	UL/CSA
20A	125-250V AC	CSA LR10990
16 (4)A	250V AC T85	VDE 62411
16 (6)A	250V AC T125 5E4	Semko EN61058-1
150A	Inrush	Semko IEC65
20A	28V DC	Approvals N/A

MATERIALS:

Body: Nylon 6.6
Actuator: Nylon 6.6
Contact Gap: 3mm (.118)
Contact Material: Silver Alloy

Part No.	Type	Action			Actuator
30-564	DPST	ON	-	OFF	Black Nylon

ROCKER SWITCH with LED

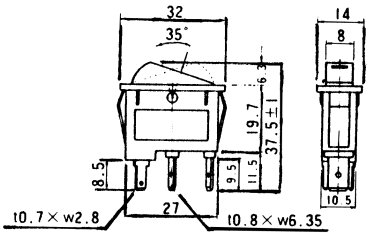

Mounting Hole: 0.430" x 1.180"

SPECIFICATIONS:

Current Rating:	10A @125V AC
Initial Contact Resistance:	20 Meg ohm (Max.)
Insulation Resistance:	500V DC 100 Meg ohm (Min.)
Dielectric Strength:	1000V AC for 1 minute
Contact Material:	Brass - Bright Nickel Plate
Terminal Material:	Brass - Bright Nickel Plate
Terminal Type:	.250" Quick Connect

Part No.	Type	Action			Actuator
30-084	SPST	ON	-	OFF	White w/ Red LED